TECHNICAL DATASHEET

TOPLA TOP TT55H

ORDER INFORMATION

TAB ID
1000313

Short Code
TT55H

DIN Marking
55510 SMF

EAN Code
3838807027558

Quantity per EU/CNT pallet
72/100 pcs

TECHNICAL INFORMATION

Voltage (V)
12

Capacity C20 (Ah)
55

CCA -18°C EN (A)
560

RC (min)
90

LxWxH (mm)
207x175x190

Total Weight (kg)
12.8

TECHNOLOGY

Primary Function
Engine Start

Battery Technology
Flooded

Grid Type (pos/neg)
Expanded/Concasted

Grid Alloy (pos/neg)
Ca/Ca

Separator
PE

Electrolyte (g/cm3)
1,28

BOX DESIGN

Box Type
L1

Cover Type
SMF

Colour
Black

Layout
0

BHD
B13

Terminal
1

DRAWING

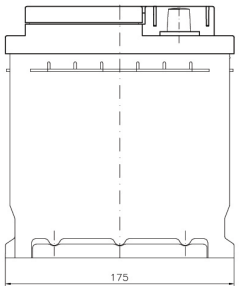

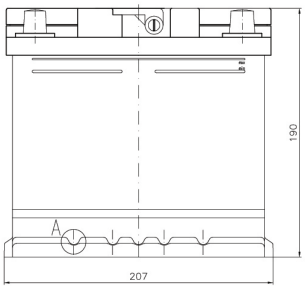

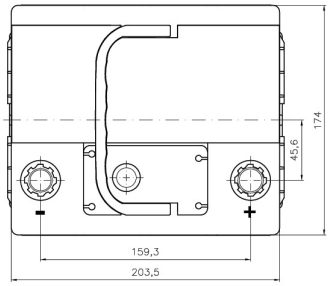

BHD

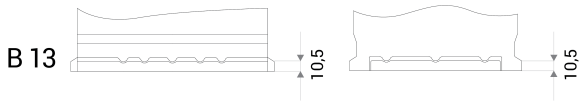

LAYOUT

0

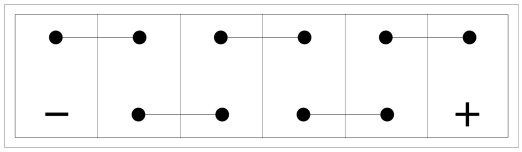

TERMINAL

1

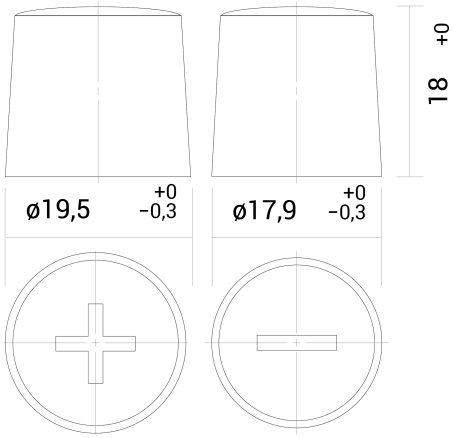

TECHNICAL DATASHEET

TOPLA TOP TT55H

TAB d.d, Polena 6, SI-2392 Mežica, Slovenia, www.tab.si