TECHNICAL DATASHEET

TOPLA TOP JIS TT45JAX

ORDER INFORMATION

TAB ID
1000333

Short Code
TT45JAX

DIN Marking
54524/51 SMF

EAN Code
3838807030473

Quantity per EU/CNT pallet
72/96 pcs

TECHNICAL INFORMATION

Voltage (V)
12

Capacity C20 (Ah)
45

CCA -18°C EN (A)
360

RC (min)
71

LxWxH (mm)
236x128x202/223

Total Weight (kg)
11.7

TECHNOLOGY

Primary Function
Engine Start

Battery Technology
Flooded

Grid Type (pos/neg)
Expanded/Concasted

Grid Alloy (pos/neg)
Ca/Ca

Separator
PE

Electrolyte (g/cm3)
1,28

BOX DESIGN

Box Type
B24

Cover Type
SMF

Colour
Black

Layout
1

BHD
B0

Terminal
1

DRAWING

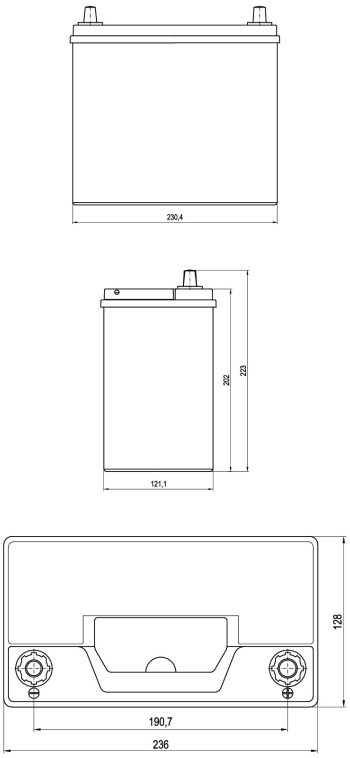

BHD

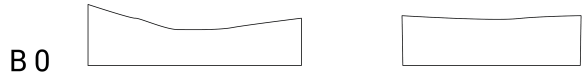

LAYOUT

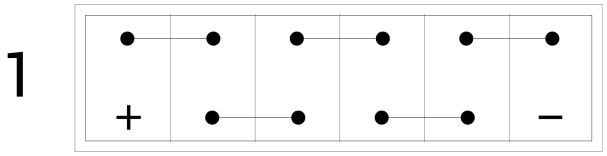

TERMINAL

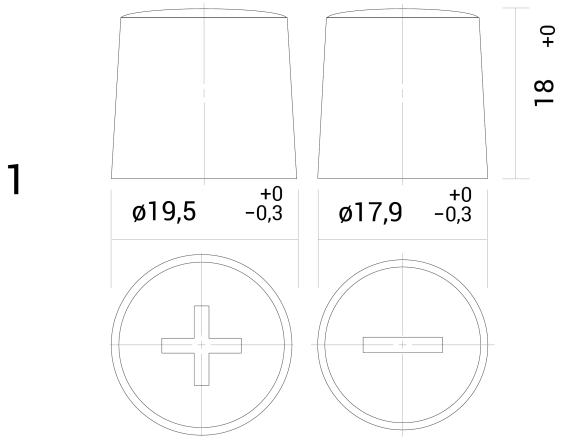

TECHNICAL DATASHEET

TOPLA TOP JIS TT45JAX

TAB d.d, Polena 6, SI-2392 Mežica, Slovenia, www.tab.si