TECHNICAL DATASHEET

VOLTHOR HR - HOT REGION 56588 EFB

ORDER INFORMATION

TAB ID
601665

Short Code
56588 EFB

DIN Marking

EAN Code
3838807045439

Quantity per EU/CNT pallet
0/126 pcs

TECHNICAL INFORMATION

Voltage (V)
12

Capacity C20 (Ah)
65

CCA -18°C EN (A)
650

RC (min)
110

LxWxH (mm)
278x175x175

Total Weight (kg)
16.7

TECHNOLOGY

Primary Function
Start/Stop Functionality

Battery Technology
EFB - Enhanced Flooded Battery

Grid Type (pos/neg)
Expanded/Concasted

Grid Alloy (pos/neg)
Ca/Ca

Separator
PE

Electrolyte (g/cm3)
1,28

BOX DESIGN

Box Type
L3B

Cover Type
SMF

Colour
Black

Layout
0

BHD
B13

Terminal
1

DRAWING

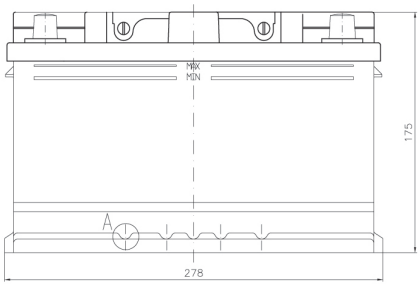

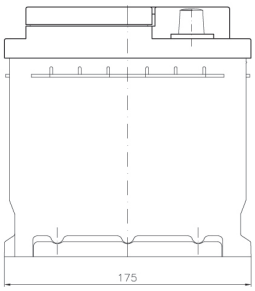

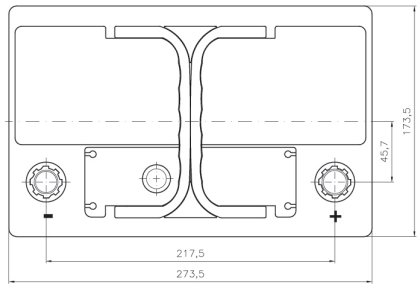

BHD

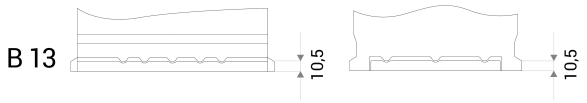

LAYOUT

0

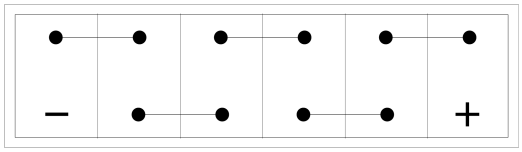

TERMINAL

1

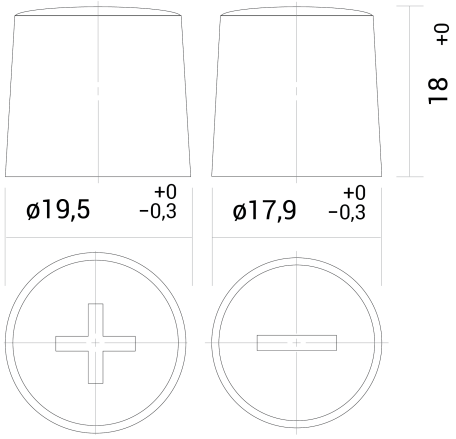

TECHNICAL DATASHEET

VOLTHOR HR - HOT REGION 56588 EFB

TAB d.d, Polena 6, SI-2392 Mežica, Slovenia, www.tab.si