TECHNICAL DATASHEET

TOPLA ENERGY TRUCK EN11D7

ORDER INFORMATION

TAB ID
1000117

Short Code
EN11D7

DIN Marking
6TN

EAN Code
3838807029156

Quantity per EU/CNT pallet
24/36 pcs

TECHNICAL INFORMATION

Voltage (V)
12

Capacity C20 (Ah)
110

CCA -18°C EN (A)
740

RC (min)
203

LxWxH (mm)
282x269x208/230

Total Weight (kg)
30.8

TECHNOLOGY

Primary Function
Engine Start

Battery Technology
Flooded

Grid Type (pos/neg)
Casted/Casted

Grid Alloy (pos/neg)
Ca/Ca

Separator
PE

Electrolyte (g/cm3)
1,28

BOX DESIGN

Box Type
D7

Cover Type
Flat

Colour
Black

Layout
2

BHD
B0

Terminal
1

DRAWING

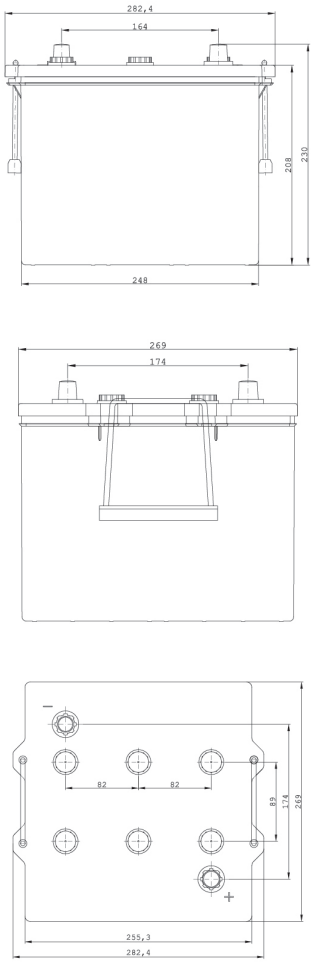

BHD

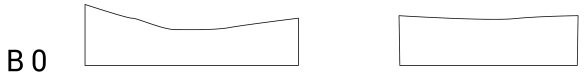

LAYOUT

2

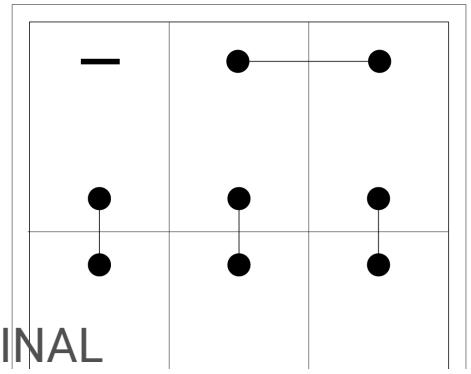

TERMINAL

1

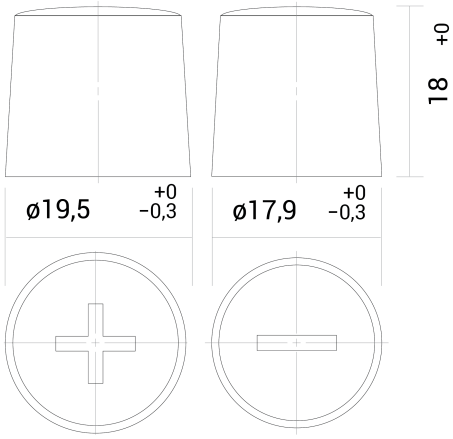

TECHNICAL DATASHEET

TOPLA ENERGY TRUCK EN11D7

TAB d.d, Polena 6, SI-2392 Mežica, Slovenia, www.tab.si